GRANGER BAY EIA

STORMWATER MANAGEMENT REPORT

DOCUMENT NO: C894/IJ/8/15 REV OA

Prepared by:

Nadeson Consulting Services (Pty) Ltd

Unit 304, Soho on Strand,

128 Strand Street

Cape Town

8002

MARCH 2026

Revision Summary

Project Name: GRANGER BAY EIA

Contract No: C894

This document has gone through a line of checking procedure, which forms part of our Quality Management System.

……..

Signature of Project Leader

……..

Signature of Department Director

OA	MARCH 2026	AE	AD	For Council Approval
Revision	Date	By	Checked	Description of Revision

TABLE OF CONTENTS

Revision Summary **2**
TABLE OF CONTENTS **3**
1 INTRODUCTION **4**
1.1 Background *4*
1.2 Report Objective *4*
2 SITE OVERVIEW **5**
2.1 General *5*
2.2 Locality **5**
2.3 Catchment and Topography *7*
2.4 Climate *8*
2.5 Geotechnical Analysis *8*
3 HYDROLOGICAL AND HYDRAULIC MODELLING **10**
3.1 Modelling Software *10*
3.2 Model inputs/Parameters *10*
4. DESIGN PRINICPLES **12**
5. EXISTING STORMWATER SYSTEMS **13**
5.1 Sub-catchment parameters 13
5.2 Pre-development flows 14
6. PROPOSED STORMWATER **15**
6.1 Proposed Development Parameters and Sub Catchments 16
6.2 Proposed Stormwater System 17
6.1.3 Runoff Quality 20
7 BEST MANAGEMENT PRACTICE **24**
8 OPERATION AND MAINTENANCE **24**
9 CONCLUSION **26**
ANNEXURE A: SITE LAYOUT **11**
ANNEXURE B: EXISTING STORMWATER INFRSTRUCTURE **12**
ANNEXURE C: PROPOSED STORMWATER LAYOUT **13**
ANNEXURE D:PRE CATCHEMENTS **14**
ANNEXURE E: POST CATCHMENTS **15**

1 INTRODUCTION

1.1 Background

Nadeson Consulting Services was appointed to conduct a Stormwater Management Plan (SWMP) for the proposed Development, The Granger Bay Extension, at the V&A Waterfront. This SWMP is for the EIA submission and will be updated as the building's layouts and landscaping proposals will likely change during design development.

This report describes the initial design methodology implemented in the management of stormwater for the proposed development, which extends past the EIA submission. The requirements of the plan are to ensure that stormwater runs off from newly surfaced areas do not negatively impact existing infrastructure and that the discharge is adequately controlled to prevent flooding and damage to property.

1.2 Report Objective

The objective of this report to show that the City of Cape Town's Management of Urban Stormwater Impacts Policy (C58/05/09) and the City of Cape Town's By-Law relating to Stormwater Management (C35/08/05) requirements in terms of a "Brownfield and Existing Sites" are achieved.

In terms of the policy, an assessment of stormwater runoff quantity and quality must provide interventions which reduce the negative impact of the proposed development on existing conditions.

As the site is located within the V&A Waterfront, which will connect to private stormwater infrastructure and drain directly into the sea, it is noted that the additional stormwater quantity will not have a negative impact on downstream infrastructure or river corridors. Therefore, attenuation is not necessarily required but rather recommended where possible. Further, as new stormwater infrastructure will be built to align to new roads and buildings, the pipes will be sized to accommodate the additional flows where necessary.

The objectives are therefore as follows:

- To compute future stormwater runoff for various return periods.
- To illustrate a design which incorporates suitable site design practices and techniques, thus preventing negative stormwater impacts. This will mainly be reviewed with respect to quality over quantity.
- To make recommendations regarding treatment and control measures that would enable

best compliance to the CoCT's requirements.

- To provide recommendations in respect of inspection and maintenance requirements post-construction.

2 SITE OVERVIEW

2.1 General

The proposed development incorporates the reclamation of approximately 3.81 hectares of land from Table Bay to accommodate new coastal public amenities and new mixed-use development. This reclamation will be protected by a new permanent rock revetment and two (east' and 'west') breakwaters forming a new protected bay approximately 3 hectares in extent. New mixed-use development is proposed on the portion of the site currently located within 100 meters of the highwater mark, which will accommodate residential, hotel, leisure, and commercial uses, with residential accommodation options such as hotels, serviced apartments, and private apartments. The stormwater will be evaluated for all Stormwater outfalls, wit areas falling outside of the EIA area. The general percentage breakdown of the existing and reclaimed area is shown in Table 2-1 and 2-2 below.

Table 2-1: Existing Development Footprint

Land Use	% of Area
Building	42%
Walkways	18%
Roads	25%
Landscaping/Open Space	15%
Total	**100%**

Table 2-2: Proposed Reclaimed Development Footprint

Land Use	% of Area
Building	40%
Coastal Protection	21%
Walkways	20%
Landscaping/Open Space	19%
Total	**100%**

2.2 Locality

The Granger Bay Precinct lies west of Beach Road and north of Granger Bay Boulevard. The proposed site includes a portion of Erf 173712 seawards of the 100m setback from the highwater mark, a portion of Erf 177853 (undeveloped land between Erf 173712 and the highwater mark), and land to be reclaimed from the sea below the highwater mark (Figure 3-1 and Table 3-2). The site, inclusive of the proposed reclaimed land and the proposed new bay is approximately 107550m2 in extent.

Figure 2-1: Locality Map of the site and proposed reclaimed area

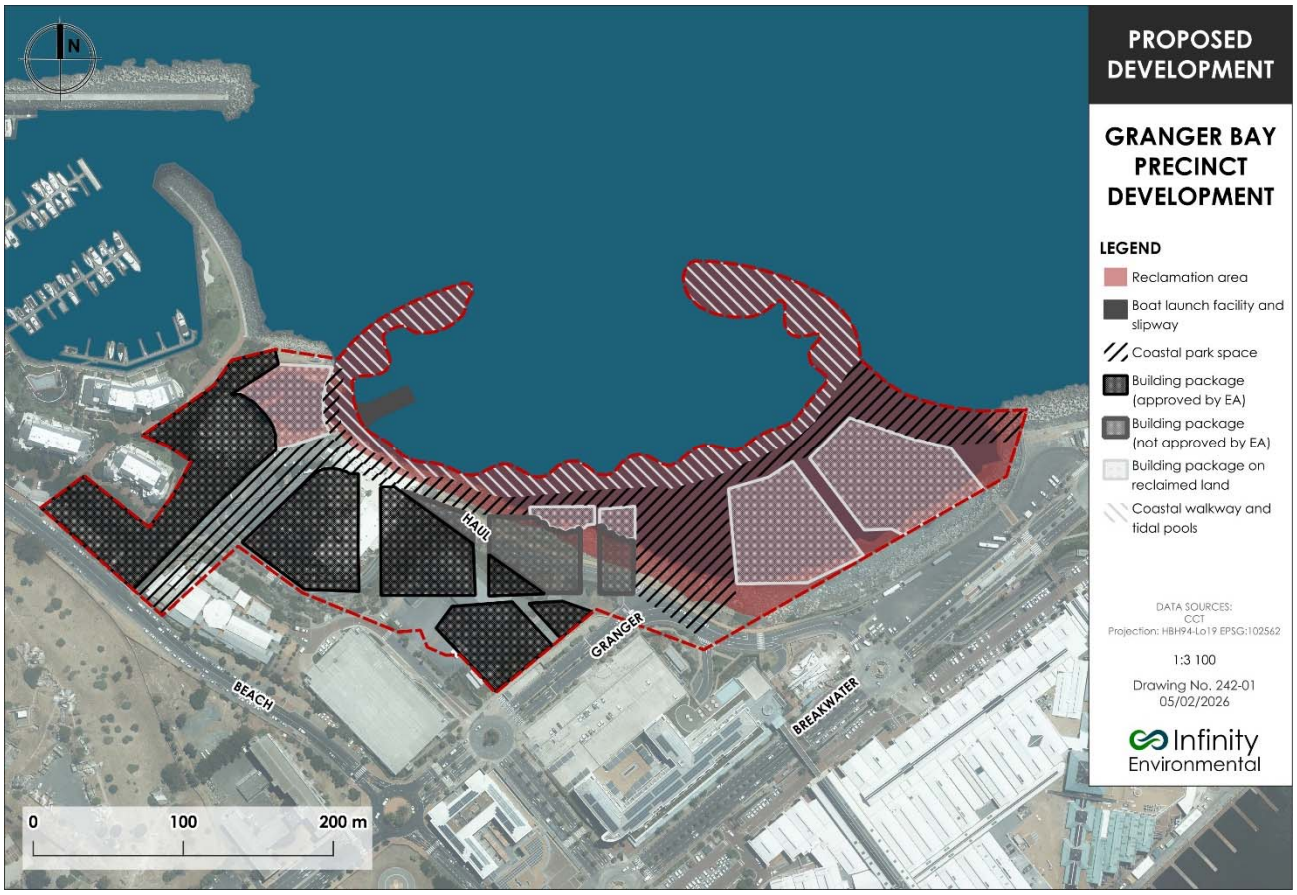

Figure 2-2: Proposed development and expansion of the V&A Granger Bay Precinct (Infinity Environmental, 2026)

2.3 Catchment and Topography

The topography of the proposed Granger Bay Precinct site has a subtle increase in elevation from the western section to the eastern section of the site land, for example, the elevation near the Oceana Power Boat Club is around 1 metre above sea level (amsl), whereas the elevation near the current location of the Oranjezicht City Farm Market is about 12m amsl. However, the proposed site is generally flat and increases steadily to the base of Signal Hill in Green Point and increases to around 350m amsl at the top of Signal. There will be sufficient slopes present to drain stormwater overland. However, there are 2 areas of unavoidable low points within Granger Bay.

The existing Granger Bay stormwater system discharges directly to the Atlantic Ocean through three separate outfalls (Outfall A to C). All three outfalls fall within the V&A Waterfront site boundary and are indicated in Figure 2-3. In general, the stormwater network serves the full extent of the site, as well as an upstream catchment from the CoCT that ties into the system and drains towards Outfall A.

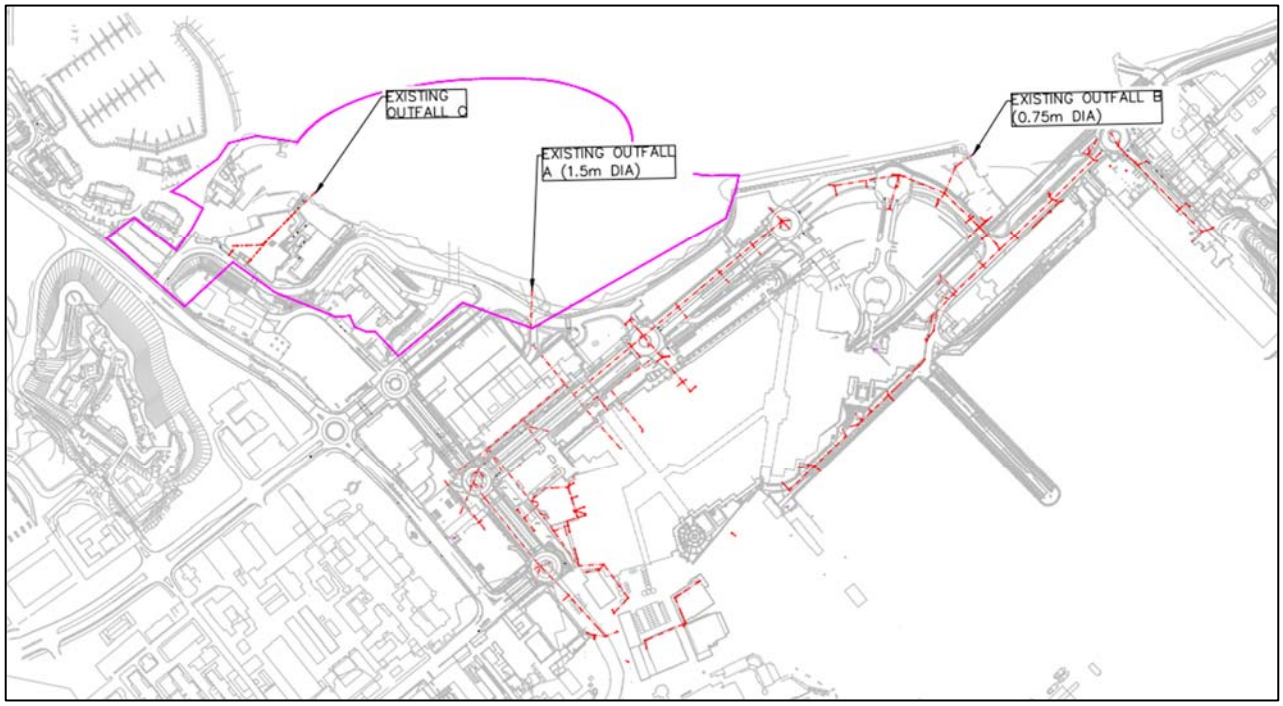

Figure 2-3: Existing Stormwater Network showing the Existing Outfalls

The existing catchments have been modeled from survey data and are shown in Figure 2-4 below.

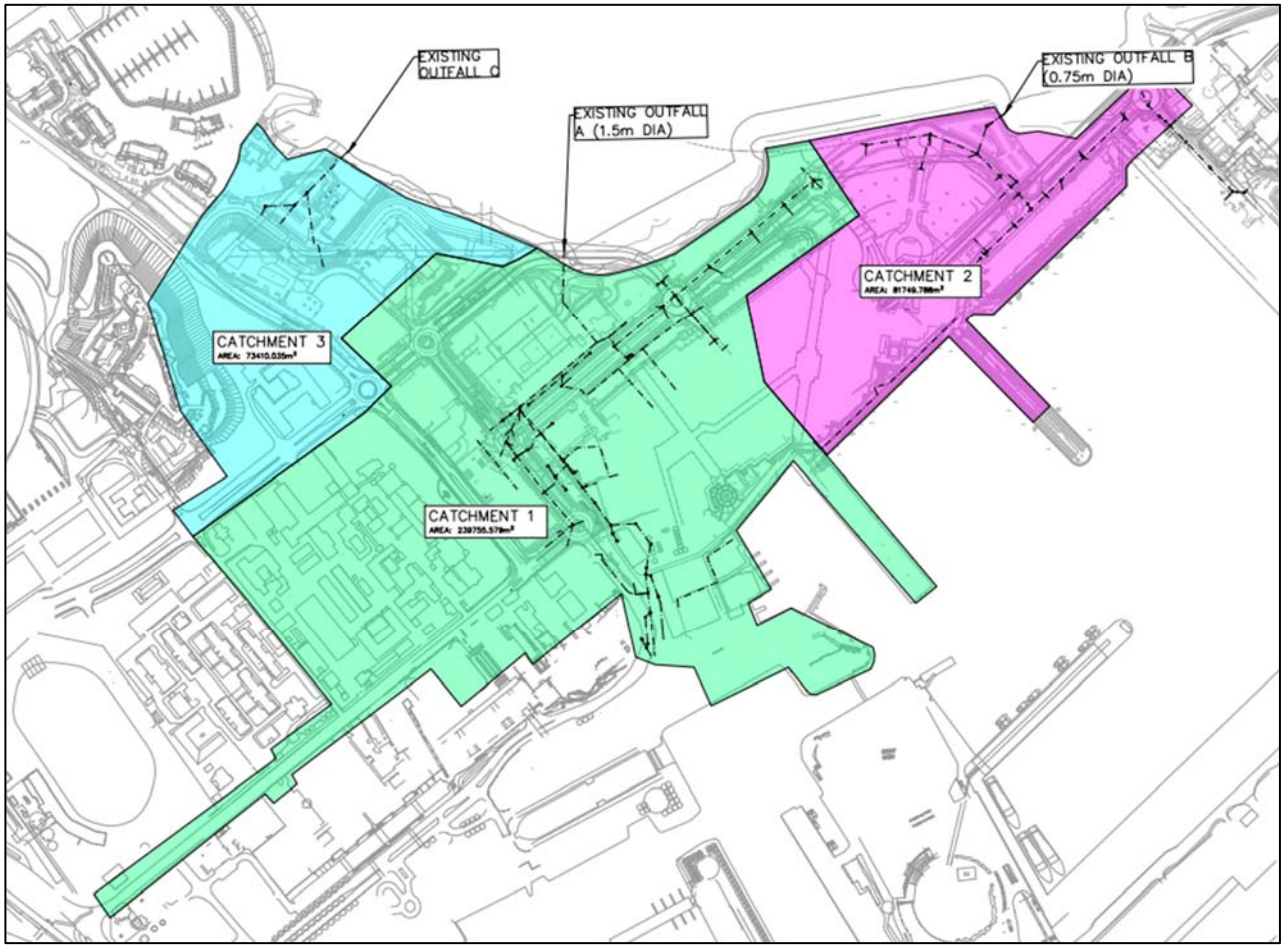

Figure 2-4: Existing Stormwater Catchments

2.4 Climate

The weather station with ID 6682 from the Google Earth file "Rainfall Grid CC was utilized to determine the mean annual precipitation (MAP) of approximately 584mm. Majority of the precipitation occurs during months May to September. The temperatures are highest on average 28°C in February and lowest average 16°C in the months July and August.

2.5 Geotechnical Analysis

A geotechnical investigation was completed by SRK Geotechnical Consultants in August 2025 (Refer to Annexure E). The study indicated the general conditions of the soil. Relevant findings from the investigation as reported were the following:

- ***Geology and Engineering Geology:*** *The site is located on predominantly reclaimed land along the Granger Bay coastline. The reclaimed platform overlies the original marine seabed profile and natural geological formations. The underlying natural geology comprises transported marine sediments overlying residual phyllite and competent phyllite bedrock of the Malmesbury Group. The engineering geology is therefore characterised by highly variable man-placed fill material over weaker marine sediments and progressively stronger residual and bedrock horizons at depth. Bedrock was encountered at variable*

depths across the site, typically below thick fill and marine deposits, and is expected to provide competent founding conditions where exposed. However, the upper profile is dominated by heterogeneous reclaimed materials with inconsistent engineering properties.

- ***Soil Profiles:*** *The typical soil profile across the site consists of the following general sequence:*
  - ***Surface layer:*** *Asphalt, paving, or concrete overlying compacted fill.*
  - ***Reclaimed fill (variable thickness):*** *Sandy fill, variable fill, rockfill, and uncontrolled fill containing gravel, cobbles, rubble, and refuse. This layer is highly heterogeneous and ranges from loose to dense condition.*
  - ***Transported marine sediments:*** *Typically softer and more compressible sandy or silty materials representing the original seabed.*
  - ***Residual phyllite:*** *Moderately weathered material with improved strength characteristics.*
  - ***Phyllite bedrock:*** *Competent rock suitable for load-bearing foundations where encountered.*

  The fill thickness varies significantly across the site and may extend to depths exceeding 10 m or more in certain locations.

- ***Material utilization and subgrade preparation:*** *Due to the reclaimed nature of the site, shallow excavations will encounter predominantly imported fill of variable quality. The sandy fill generally meets general fill specifications but exhibits low cohesion and variable compaction characteristics. Variable fill containing mixed particle sizes and rubble has inconsistent engineering performance and may require processing before reuse.*
  - *Material utilisation considerations include:*
  - *Suitable fill may be reused as general fill or selected fill if stockpiled, blended, and tested for compliance with grading and strength specifications.*
  - *Poor quality or uncontrolled fill containing refuse or oversized material should not be used in structural layers without processing.*
  - *Some fill materials may be suitable for reclamation or bulk fill but may be prone to consolidation settlement, particularly below the groundwater table.*
  - *Subgrade preparation will likely require proof-rolling, removal of unsuitable material, and recompaction or improvement.*
  - *Ground improvement techniques such as deep compaction, vibro-compaction, or replacement may be required where loose or compressible materials are present.*

- *Subgrade strength is variable and must be assessed locally during construction.*

- ***Groundwater:*** *Groundwater was encountered across the site at relatively shallow depths, typically within approximately 2 m to 12 m below ground level, depending on location and elevation. Groundwater levels are strongly influenced by proximity to the ocean and tidal fluctuations due to the coastal setting and reclaimed nature of the site. In lower-lying areas, groundwater may be encountered within approximately 3–5 m of ground level.*

3 HYDROLOGICAL AND HYDRAULIC MODELLING

3.1 Modelling Software

Although the pre and post development criteria do not need to be met, a detailed analysis was conducted to view the peak flows pre and post development. The proposed reclaimed area was kept separate. The analysis was undertaken using the Storm and Sanitary Analysis (SSA) software to determine the pre and post development runoff for the various storm events i.e. the 5-year, 10-year, 50-year and 100-year.

The EPA SWMM hydrological method has been used to determine the drainage area runoff with the infiltration method set to SCS Curve Number. The following physical properties are required to calculate the runoff, the area, equivalent width, curve number, average slope and hydrological soil group.

3.2 Model inputs/Parameters

Parameters for catchment properties or the development of a design storm are based on accepted norms or sound engineering judgement. Where possible the values have been calculated to ensure the best possible accuracy.

3.2.1 Catchment Areas

All sub-catchments are assigned a composite CN number and topographical information (size, equivalent width, average slope, depression) from which the physical properties used in the model are derived.

The Curve Number is a simple, widely used, and efficient method of determining the fraction of precipitation that will translate to surface runoff. It is based on the drainage areas hydrological soil group, land use hydrological condition (% impervious).

A high CN value (98 for paved roads) causes nearly all precipitation to translate to runoff, where as a low CN value (30 for sandy conditions) causes most of the precipitation to be captured as infiltration.

3.2.1 Hydrological Characteristics

The software utilizes a “rainfall designer” to create a design storm for a specified storm distribution. Storm intensities for a 24-hour period were determined from rainfall data captured by the City of Cape Town, which was accessed from the Google Earth file “Rainfall Grid CC 2012”. The storm intensities incorporate a 15% climate change factor.

Table 3.1: Storm Point Rainfall Data

	Return Period (years) + Climate Change (15%)					
	2	**5**	**10**	**20**	**50**	**100**
24 hours	43.36	58.19	69	80.2	96.03	108.79

The position of the rain gauge in relation to the site is shown in the Figure 3-1 below.

Figure 3-1: Satellite image of Rain Gauge

4. DESIGN PRINICPLES

The design principles according to which the stormwater model was measured must comply with the recommendations of the following publications.

- CoCT Management of Urban Stormwater Impacts Policy – Version1.1 – 27th May C58/05/09
- The South African Guidelines for Sustainable Drainage Systems, Report to the Water Research Commission by the University of Cape Town, May 2013
- CoCT Design Rainfall Depth Grid
- Standard and Guidelines for Roads and Stormwater – Version 4.0 – September 2024, City of Cape Town Transport Directorate.
- SANRAL Drainage Manual, 6th Edition
- Georgia Stormwater Management Manual, Stormwater Policy Guidebook-Volume 1: August 2001
- Georgia Stormwater Management Manual, Technical Handbook-Volume 2: 2016 Edition
- Guidelines for Human Settlement and Design (Red Book) prepared by the CSIR.

The CoCT "Management of Urban Stormwater Impact Policy" all stormwater management systems shall be planned and designed in accordance with the best practice criteria and guidelines to support Water Sensitive Design Principles and the following specific sustainable urban drainage system objectives:

a) Improve the quality of stormwater runoff

- Reduction of post development pollutant removal rates. Total suspended solids – 80%; Total Phosphorus – 45%

b) Control quantity and rate of stormwater runoff

- As discussed in Section 1, the stormwater from the development will enter private stormwater infrastructure and discharge directly into the sea. It is therefore, proposed that stormwater attenuation to meet pre-development flows is not necessary. However, all private stormwater pipes will need to accommodate the updated flows for the development.

c) Encourage natural ground water recharge

- An underground stormwater conveyance system that can adequately accommodate the flows generated by a minor storm (1:5 year storm event).
- A major system which is free draining and allows for overland flow through emergency escape routes during larger storm events (1:50 year storm event).
- Encourage infiltration of stormwater to aid in recharging of ground water.
- Incorporating Best management Practices to achieve set criteria.

In accordance with the Urban Stormwater Impacts Policy the design storm event for quality treatment is ½ year rainfall interval over a 24-hour period. The 24-hour data was plotted to generate the logarithmic trendline to determine the ½ year and 1 year rainfall interval.

Table 4-1: Rainfall Information.

Sources of Rainfall Information	Recurrence Period (Years) Storm Rainfall (mm)							
	0.5 yr	1 yr	2 yr	5 yr	10yr	20 yr	50 yr	100 yr
Logarithmic Treadline Calculation	18.52	30.4						
2012 CoCT Rainfall Grid RP2 200 Climate Change			43.36	58.19	69	80.2	96.03	108.79

5. EXISTING STORMWATER SYSTEMS

Based on existing information received from the V&A Waterfront and the surveys conducted around the V&A Waterfront the existing stormwater network has been mapped and catchments drawn up. There are 3 existing stormwater outfalls which discharge stormwater from the Waterfront and the surrounding CoCT areas into the ocean. A summary of the 3 outfalls is shown below:

Existing Outfall A - 1.5m diameter outfall. The outfall receives flow from a large portion of the existing V&A site to the west and south of the Victoria Wharf shopping centre and the existing Granger Bay area. It also receives flows from offsite around Portswood Road, Beach Rd, Breakwater Blvd and Somerset Hospital.

Existing Outfall B - 0.75m diameter outfall. The outfall receives flows from East Pier Road, the existing Table Bay Hotel car park (currently being developed for with a basement parking and future buildings) and a portion of Breakwater Blvd.

Existing Outfall C – TBC. This outfall collects stormwater from Haul Rd, Beach Rd, the parking area outside of the Grand Africa Café, the old Oranjezicht Market and the existing Oceana Power Boat Club (OPBC).

5.1 Sub-catchment parameters

The pre-development parameters and sub-catchment modelling parameters are shown in Table 5-1 to 5-6 below. According to the geotechnical report (Annexure E) the site consists of variable fill. The various catchments are built-up urban areas which consist of buildings, roadways, walkways, parking areas and landscaping. The ground water on the site varies with the tides of the sea and sits at approximately 0.8m a.m.s.l.

Table 5-1: Pre-Development parameters for all catchments

Parameters	Pre-Development
Impervious Area (%)	85
Impervious Area (n)	0.015
Pervious Area (n)	0.15
Slope (%)	varies
Depression Storage Impervious Area	2mm
Depression Storage Pervious Area	2.5mm

Table 5-2: Pre-Development modelling parameters Catchment 1-Oufall A

Parameter	Catchment
Slope	2%
Equivalent Width	225
Impervious (%)	85
CN	92.72
Area (ha)	23.98

Table 5-3 Pre-Development modelling parameters Catchment 2-Oufall B

Parameter	Catchment
Slope	1%
Equivalent Width	165
Impervious (%)	85
CN	92.72
Area (ha)	8.18

Table 5-4: Pre-Development modelling parameters Catchment 3-Outfall C

Parameter	Catchment
Slope	5
Equivalent Width	143
Impervious (%)	85
CN	92.72
Area (ha)	7.34

5.2 Pre-development flows

Table 5-3 to 5-5 below indicates the pre-development runoff calculated for the 5year, 10 year, 50 year and 100-year return period utilizing the catchment criteria. The catchments were modeled

on Storm and Sanitary Analysis software.

Table 5-3: Catchment 1 Pre-Development runoff

Catchment 1 Storm Event (24 Hour Duration)			
5year	10year	50year	100year
Pre-Development Peak Flow (m^3/s)			
1.35	1.68	2.58	3.02

Table 5-4: Catchment 2 Pre-Development runoff

Catchment 2 Storm Event (24 Hour Duration)			
5year	10year	50year	100year
Pre-Development Peak Flow (m^3/s)			
0.568	0.71	1.065	1.24

Table 5-3: Catchment 3 Pre-Development runoff

Catchment 3 Storm Event (24 Hour Duration)			
5year	10year	50year	100year
Pre-Development Peak Flow (m^3/s)			
0.632	0.774	1.14	1.32

6. PROPOSED STORMWATER

The proposed development layout with the proposed stormwater overlay is shown in Figure 6-1 below.

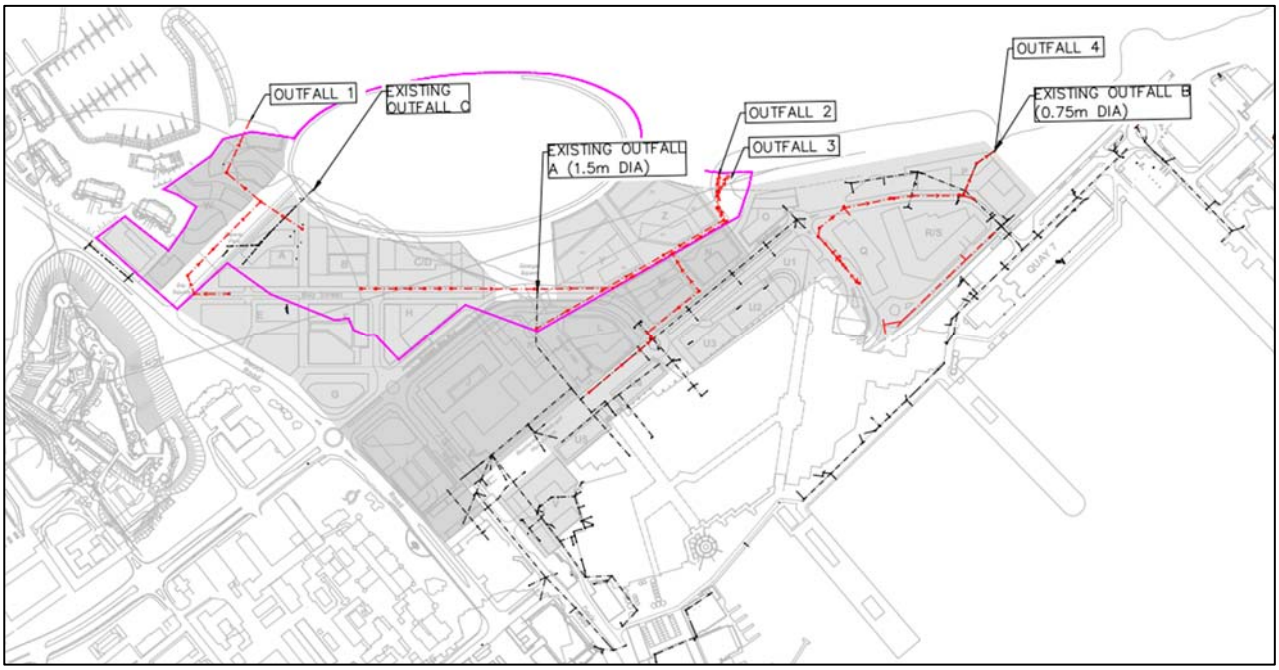

Figure 6-1: Proposed development

6.1 Proposed Development Parameters and Sub Catchments

To model the stormwater runoff for the post-development, the site was sub-divided into 4 catchments to model the run-off for the various catchment areas, this was based on the slope, surface type and geometric constraints. The post-development parameter and sub-catchment modelling parameters are shown in Table 6-1 and 6-8 below. The new revetment was not included in the catchment areas as it is assumed as the runoff from the walkways around the revetement will drain directly into the sea.

Table 6-1: Post-Development parameters for the post development catchments

Parameters	Post-Development
Impervious Area (%)	Varies
Impervious Area (n)	0.015
Pervious Area (n)	0.15
Slope (%)	varies
Depression Storage Impervious Area	2mm
Depression Storage Pervious Area	2.5mm

Table 6-2: Table 6-2: Catchment 1-Post-Development modelling parameters Outfall GB1

Parameter	Catchment
Slope	5
Equivalent Width	165
Impervious (%)	85
CN	91.84
Area (ha)	2.06

Table 6-3: Catchment 2-Post-Development modelling parameters Outfall GB2

Parameter	Catchment
Slope	2
Equivalent Width	200
Impervious (%)	85
CN	91.84
Area (ha)	16.43

Table 6-4: Catchment 3-Post-Development modelling parameters Outfall GB3

Parameter	Catchment
Slope	10
Equivalent Width	185

Impervious (%)	85
CN	91.84
Area (ha)	9.16

Table 6-5: Catchment 4-Post-Development modelling parameters Outfall GB4

Parameter	Catchment
Slope	1
Equivalent Width	165
Impervious (%)	85
CN	91.84
Area (ha)	6.81

6.2 Proposed Stormwater System

The proposed stormwater for the site will be via underground stormwater networks which ties into stormwater outfalls, which discharge stormwater into the ocean. There will be 4 stormwater outfalls for the Granger Bay Development, which 3 (GB1 to GB3) will be new and 1 (GB4) will be existing. There have been discussions with the V&A Operations team to understand if there are any issues with the existing outfall's and whether specific measures should be incorporated. It was noted that the existing outfalls were prone to blockages from gravels and cobbles being pushed into the outfalls during storms. These would require continuous maintenance. Another issue found was that the pressure from storm surges caused manhole covers upstream of the outfall to become dislodged. Measures to reduce the risk of blockages and pressures into upstream manholes are required. It is proposed that at each outfall a non-return flap valve be installed approximately 25m away from the outfall within a chamber. This will stop backflow downstream of the valve limiting the risk of manhole covers becoming dislodged. It is further proposed that each outfall have two pipes installed from the flap manhole to the outfall, with the second pipe running at a higher level to ensure that the if the lower pipe gets blocked with gravel or cobbles, the water can overflow into the higher pipe and discharge into the sea. The indicative flap valve and overflow pipe are shown in Figure 6-2 and 6-3 respectively.

Figure 6-2: Stormwater flap valve example (Fernco)

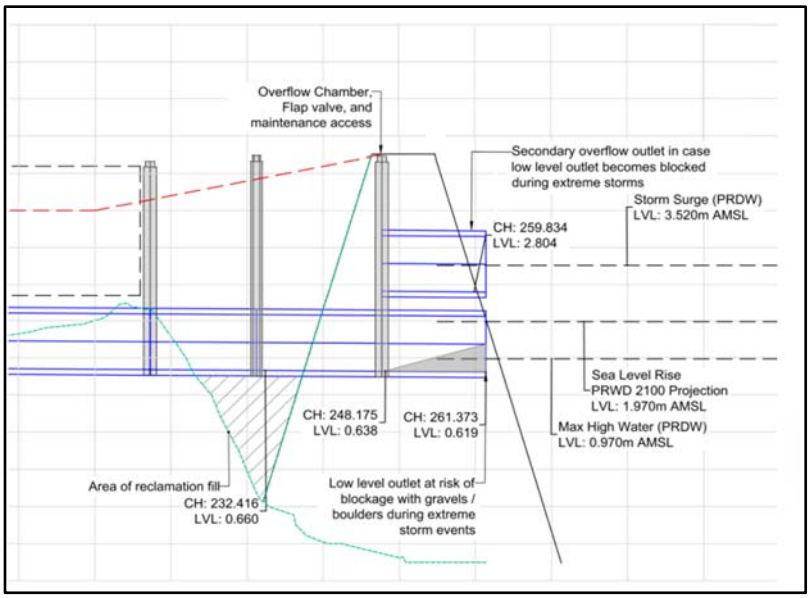

Figure 6-3: Indicative arrangement of overflow at outfall (Arup, 2023)

6.1.1 Control Quantity and Rate of Runoff

Peak flows were determined based on the Storm and Sanitary Analysis (SSA) for the various design storm recurrence periods. Pre-development flow rates were assessed as overland sheet flow and post-development flow rates based on sheet flow and conduit flow conditions with allowances made for average time of entry into the system. The results indicate the duration/rainfall depth to determine the Intensities for the different recurrence intervals. The post development flows per catchment were determined based off the catchment criteria shown in Section 6.1 and the Storm and Sanitary Analysis Software. The post development flows are shown in Table 6-6 to 6-9.

Table 6-6: Catchment 1-Post-Development parameters-Outfall GB1

Storm Event (24 Hour Duration)			
5year	10year	50year	100year
Post-Development Peak Flow (m^3/s)			
0.218	0.216	0.370	0.421

Table 6-7: Catchment 2-Post-Development parameters-Outfall GB2

Storm Event (24 Hour Duration)			
5year	10year	50year	100year
Post-Development Peak Flow (m^3/s)			
1.112	1.39	2.104	2.453

Table 6-8: Catchment 3-Post-Development parameters-Outfall GB3

Storm Event (24 Hour Duration)			
5year	10year	50year	100year
Post-Development Peak Flow (m^3/s)			
0.855	1.043	1.516	1.743

Table 6-9: Catchment 4-Post-Development parameters-Outfall GB3

Storm Event (24 Hour Duration)			
5year	10year	50year	100year
Post-Development Peak Flow (m^3/s)			
0.488	0.605	0.910	1.06

6.1.2 Post-development condition

The pre-development and post-development flows have been summed with their respective catchments in order to compare the Peak flows for pre and post development. As can be seen in Table 6-10, the flows in the post development are slightly higher than those in the pre-development. As mentioned previously the additional flows will not have a negative impact on downstream infrastructure or river corridors as the stormwater discharges directly into the sea. Although it is believed that it is not necessary to attenuate on site stormwater, measures mentioned in Section 6.1.3 should be explored to act as partial attenuation and stormwater quality management.

Table 6-10: Summary of Computations.

STORM EVENT (24 hr duration)	PRE-DEVELOPMENT PEAK FLOW (m^3/s)	POST-DEVELOPMENT PEAK FLOW (m^3/s)
5 Year Return Interval	2.55	2.673
10 Year Return Interval	3.164	3.254
50 Year Return Interval	4.785	4.900
100 Year Return Interval	5.58	5.667

6.1.3 Runoff Quality

The CoCT policy requires treatment of the runoff from the ½ year, 24-hour storm event. In terms of the CoCT's "Management of Urban Stormwater Impacts Policy", acceptable improvement in the quality of stormwater runoff may be achieved through the removal of pollutants by a combination of reducing or disconnecting impervious areas from the drainage system and the use of LIDS (Low impact drainage systems) that infiltrate or capture and treat stormwater runoff. As per the CoCT policy the runoff quality of 80% reduction of Total Suspended Solids (TTS) and 45% reduction of Total Phosphorus (TP).

The following LIDS are proposed for this development:

- Grassed swales and landscaped areas
- Oil separators
- Silt traps within manholes and catchpits
- Litter traps at catchpit entrances.

Grassed swales and Landscape Areas: It is proposed that a planting strip be place along all major roads, which will catch stormwater from walkways and NMT lanes. This will allow stormwater to be caught in landscaped areas, infiltrate into the soil and then being caught by subsoil drains. This will provide some attenuation by lengthening the time of concentration and clean the stormwater.

Figure 6-4: Typical landscaped area next to a roadway

<u>Oil Separator:</u> It is proposed that oil separators be installed at strategic positions. These include positions where there is high density of vehicles, which would be above ground parking areas open to the elements, delivery yards, marina slipways where boats are stored or offloaded. This will ensure that oils caught in stormwater runoff are filtered out discharging into the sea. A typical CoCT oil separator is shown in Figure 6-5 below.

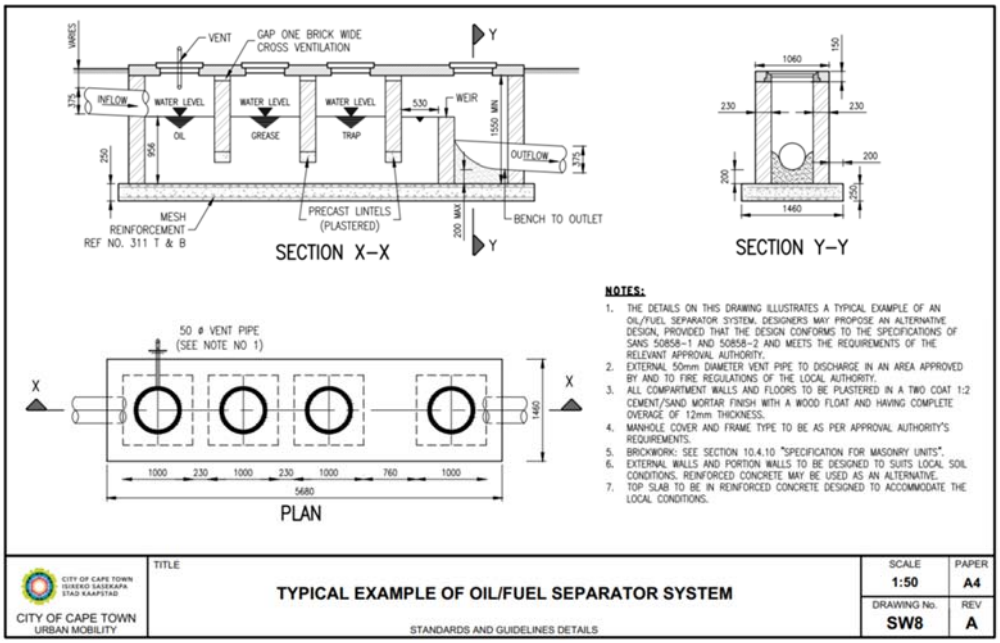

Figure 6-5: Typical CoCT oil separator (CoCT, 2024)

<u>Silt Traps:</u> It is proposed that silt traps are incorporated into manholes and catchpits where there is a high concentration of silt. This will allow silt to settle within the manhole/catchpit before being discharged into the sea. The typical CoCT detail for a silt trap incorporated into a standard manhole is shown in Figure 6-6.

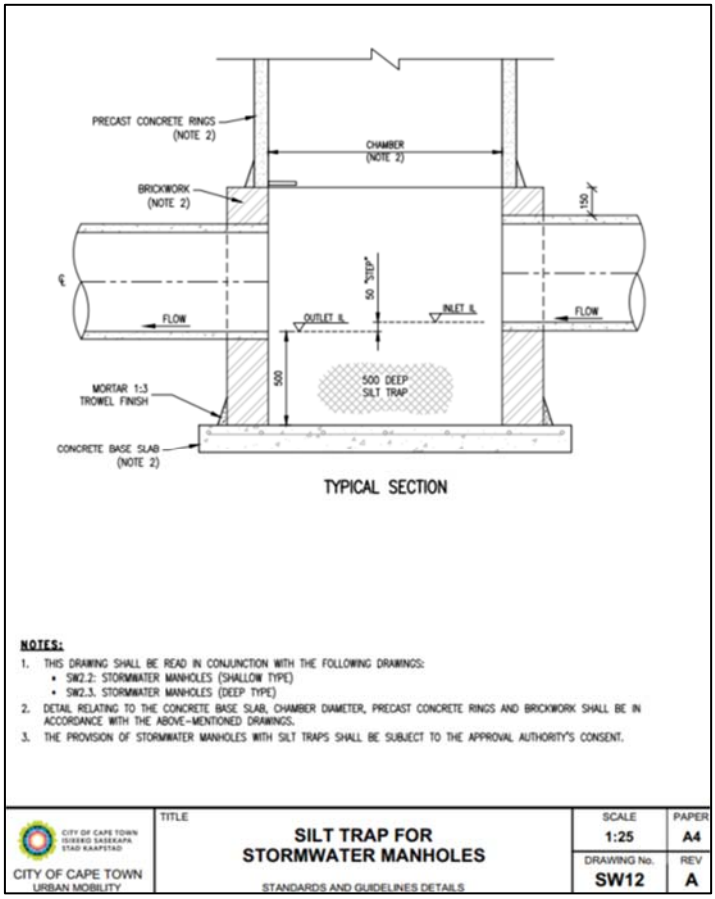

Figure 6-6: Typical CoCT silt trap (CoCT, 2024)

<u>Litter Traps at catchpit inlets:</u> It is proposed that kerb inlet catchpits be installed with a suitable littler trap at the kerb inlet. This can be done by installing a metal grating/upward steel bar, which catch litter and other larger debris before entering the catchpit structure. This ensures that catchpits do not get blocked up with litter and debris and ensures these items do not get discharged into the sea.

It would be recommended that litter traps be installed on all catchpits which fall outside of the V&A Precinct but contribute to the V&A Outfalls as the V&A Waterfront are not able to manage litter within these areas. This is evident in catchment 2 (currently outfall 1), which collects water along Portswood Road (CoCT managed roads and stormwater infrastructure) and discharges through Outfall 2 (currently outfall A).

The typical litter trap detail for kerb inlets from the CoCT is shown in Figure 6-7 below.

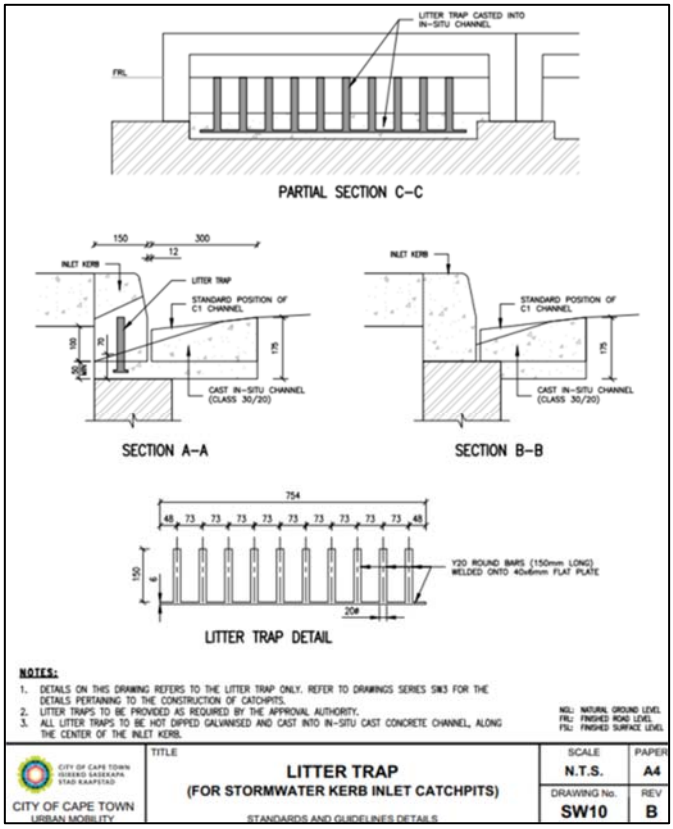

Figure 6-7: Typical CoCT litter trap (CoCT, 2024)

<u>Granger Walk Water Strategy:</u> The proposed Granger Bay Development has a long park/landscaped feature incorporating landscaped areas, walkways and water storage areas, which connects to the new coastal protection area. The final levels and wave overtopping into Granger Walk still needs to be finalised but the concepts need to remain the same. The below Figure 6-8 provides an overview proposal of the Granger Walk.

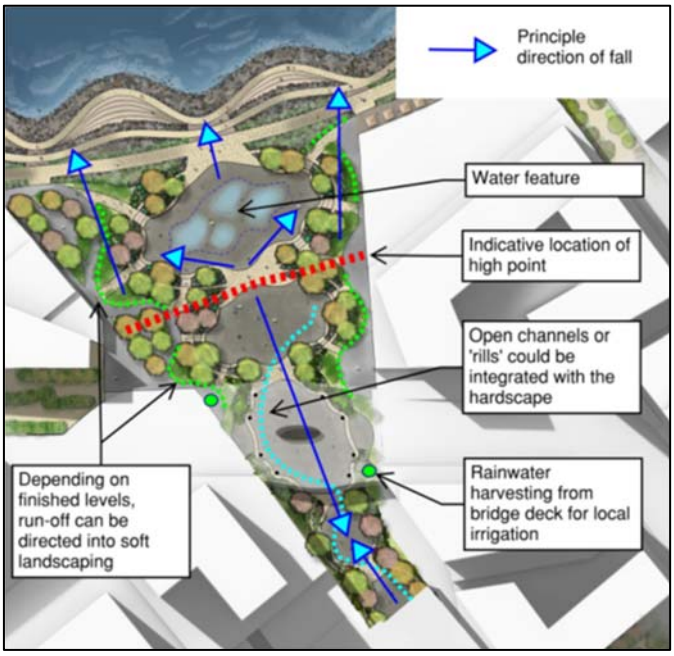

Figure 6-8: Granger Walk Water Strategy (Arup, 2023)

The CoCT Water Quality Volume

The Water Quality Volume (WQV) is calculated by the summation of the total runoff from each sub-catchment in the proposed development after applying the ½ year, 24-hour storm event.

A water quality volume of 225.87 m^3 was determined based on 1/2-year, 24-hour storm event shown in the table below.

Table 6-2: Water Quality Volume

Debo & Reese (2003)		Note:		
WQV	PRvA/1000			
P	18.5	P = 0.5-year figure from trend calculation		
Rv	0.85	I = Percentage impervious area of site		
A	350000	A = Total site area		
Water Quality Volume	5509.105	m^3		
	0.06376	m^3/s		
Pre-Condition	0.041	0.00261	m^3/s	
Post Condition	0.082	0.00523	m^3/s	
Water Quality Volume		0.00261	m^3/s	
		225.87	m^3	

7 BEST MANAGEMENT PRACTICE

In terms of the City of Cape Town Management of Urban Stormwater Impacts Policy acceptable improvement in the quality of stormwater runoff may be achieved through the removal of pollutants total suspended solids and reduce total phosphorous in urban post-development runoff. Landscaped areas acting as swales will be incorporated as well as the items mentioned in Section 6.1.3.

8 OPERATION AND MAINTENANCE

Operation and maintenance of all stormwater infrastructure is key for a continual success of attenuation and pollutant removal of stormwater. Regular maintenance is, therefore, important over months and years the development is in use.

Typical maintenance activities on the stormwater system will be as identified in Table 8-1 below.

Table 8-1: Summary of Computations.

ACTIVITY	SCHEDULE
• Stormwater pipes to be cleaned of any silt by flushing pipeline. • Stormwater manhole and catchpits, remove silt and litter from the traps in structures. • Clean and removal debris from inlet and outlet structures. • Mow side slopes. • Inspect oil/grease chambers and remove debris, oils and other contaminants and expose of	Monthly
• If wetland components are included, inspect for invasive vegetation.	Semiannual Inspection
• Inspect for damage, paying particular attention to the control structure. • Monitor for sediment accumulation in the facility and forebay. • Examine to ensure that inlet and outlet devices are free of debris and operational.	Annual Inspection
• Repair undercut or eroded areas.	As Needed
• Perform wetland plant management harvesting	Annually (if needed)
• Monitor sediment accumulations, and remove sediment when the pool volume has become reduced significantly, or the pond becomes eutrophic.	10 to 20 years of after 25% of the permanent pool volume has been lost.
• For grass channels, mow grass to maintain a height of 4 to 6 inches. Remove grass clippings.	As needed (frequent/seasonally)
• Inspect grass alongside slopes for erosion and formation of rills or gullies and correct.	Annually

• Based on inspection, plant an alternative grass species if the original grass cover has not been successfully established. • Replant wetland species (for wet swale) if not sufficiently established.	(semi-annually the first year)
• Grass swales, remove sediment build-up within the bottom of the swales once it has accumulated to 25% of the original volume or 100mm above check structure	As needed

9 CONCLUSION

The proposed development includes a piped stormwater system to accommodate the minor storm events, which will discharge into 4 outfalls, 3 which are new. Catchment 2 will continue to collect water from external CoCT areas and discharge into Outfall 2. It is stated that since the stormwater discharges straight into the sea, there will be no negative impact on downstream stormwater infrastructure or river corridors. It is therefore stated that predevelopment flows do not need to meet post development flows. The water quality of stormwater run-off needs to be cleaned by implementing measures such as swale/landscaped areas, silt and litter traps and oil separators. This will ensure water entering the sea is of a high quality and does not have a negative impact on marine life.

ANNEXURE A: SITE LAYOUT

LOCALITY

GRANGER BAY PRECINCT DEVELOPMENT

Legend

- EIA project site
- Reclaimed land

SOURCE:
CCT Aerial Imagery 2024
Projection: Hartebeesthoek94_Io19 (E-N)
ESRI: 102562

Scale:1:5 000

Drawing No. 242-01
13 January 2026
K Heinrich

Infinity Environmental

PROPOSED DEVELOPMENT

GRANGER BAY PRECINCT DEVELOPMENT

LEGEND

- Reclamation area
- Boat launch facility and slipway
- Coastal park space
- Building package (approved by EA)
- Building package (not approved by EA)
- Building package on reclaimed land
- Coastal walkway and tidal pools

DATA SOURCES:
CCT
Projection: HBH94-Lo19 EPSG:102562

1:3 100

Drawing No. 242-01
05/02/2026

Infinity Environmental

ANNEXURE B: EXISTING STORMWATER INFRSTRUCTURE

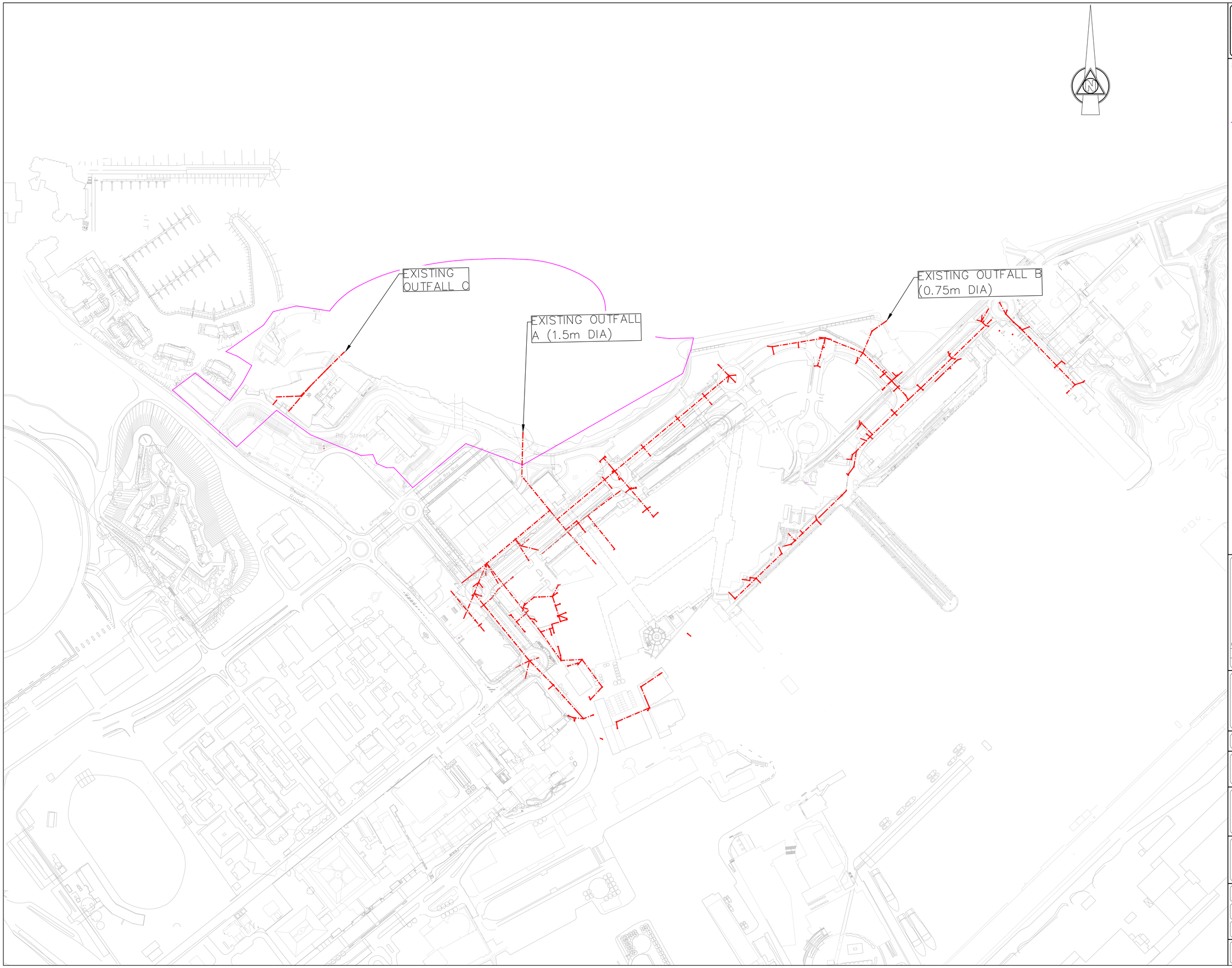

COPYRIGHT OF THIS DRAWING IS HELD BY
NADESON CONSULTING SERVICES (PTY) LTD
AND MUST NOT BE COPIED, RETAINED OR USED WITHOUT CONSENT.

ALL DIMENSIONS & LEVELS TO BE VERIFIED ON SITE BY THE CONTRACTOR AND ANY DISCREPANCIES REPORTED TO THE ENGINEER IMMEDIATELY.

GENERAL NOTES:

LEGEND

- EXISTING STORMWATER PIPE
- EXISTING STORMWATER MANHOLE
- EXISTING STORMWATER CATCHPIT
- EIA EXTENTS

MK	DATE	INIT	DESCRIPTION
0A	25/02/26	RN	FOR APPROVAL

REVISION

NADESON
CONSULTING SERVICES
Unit 304, Soho on Strand, 128 Strand Street, Cape Town, 8000 PO Box 51121, V&A Waterfront, 8002
T +27 21 443 2600
E capetown@nadeson.net

Consultant Signature

CLIENT
V&A WATERFRONT

Project
GRANGER BAY EIA

Drawing Title
EXISTING STORMWATER LAYOUT

Design	Design Check
RN	AE
Drawn	**Checked**
RN	AE
Date	**Scale**
FEBRUARY	1:1500

Project No	Drawing No	Revision
C894	C0002	0A

ANNEXURE C: PROPOSED STORMWATER LAYOUT

COPYRIGHT OF THIS DRAWING IS HELD BY
NADESON CONSULTING SERVICES (PTY) LTD
AND MUST NOT BE COPIED, RETAINED OR USED WITHOUT CONSENT.

ALL DIMENSIONS & LEVELS TO BE VERIFIED ON SITE BY THE CONTRACTOR AND ANY DISCREPANCIES REPORTED TO THE ENGINEER IMMEDIATELY.

GENERAL NOTES:

LEGEND

- EXISTING STORMWATER PIPE
- EXISTING STORMWATER MANHOLE
- EXISTING SW CATCHPIT
- PROPOSED STORMWATER PIPE
- PROPOSED STORMWATER MANHOLE
- PROPOSED STORMWATER CATCHPIT
- EIA EXTENTS

MK	DATE	INIT	DESCRIPTION
0A	25/02/26	RN	FOR APPROVAL

REVISION

NADESON
CONSULTING SERVICES
Unit 304, Soho on Strand, 128 Strand Street, Cape Town, 8001 PO Box 51121, V&A Waterfront, 8002
T +27 21 443 2600
E capetown@nadeson.net

Consultant Signature

CLIENT
V&A WATERFRONT

Project
GRANGER BAY EIA

Drawing Title
PROPOSED STORMWATER LAYOUT

Design	Design Check
RN	AE
Drawn	**Checked**
RN	AE
Date	**Scale**
FEBRUARY	1:1500

Project No	Drawing No	Revision
C894	C0001	0A

ANNEXURE D:PRE CATCHEMENTS

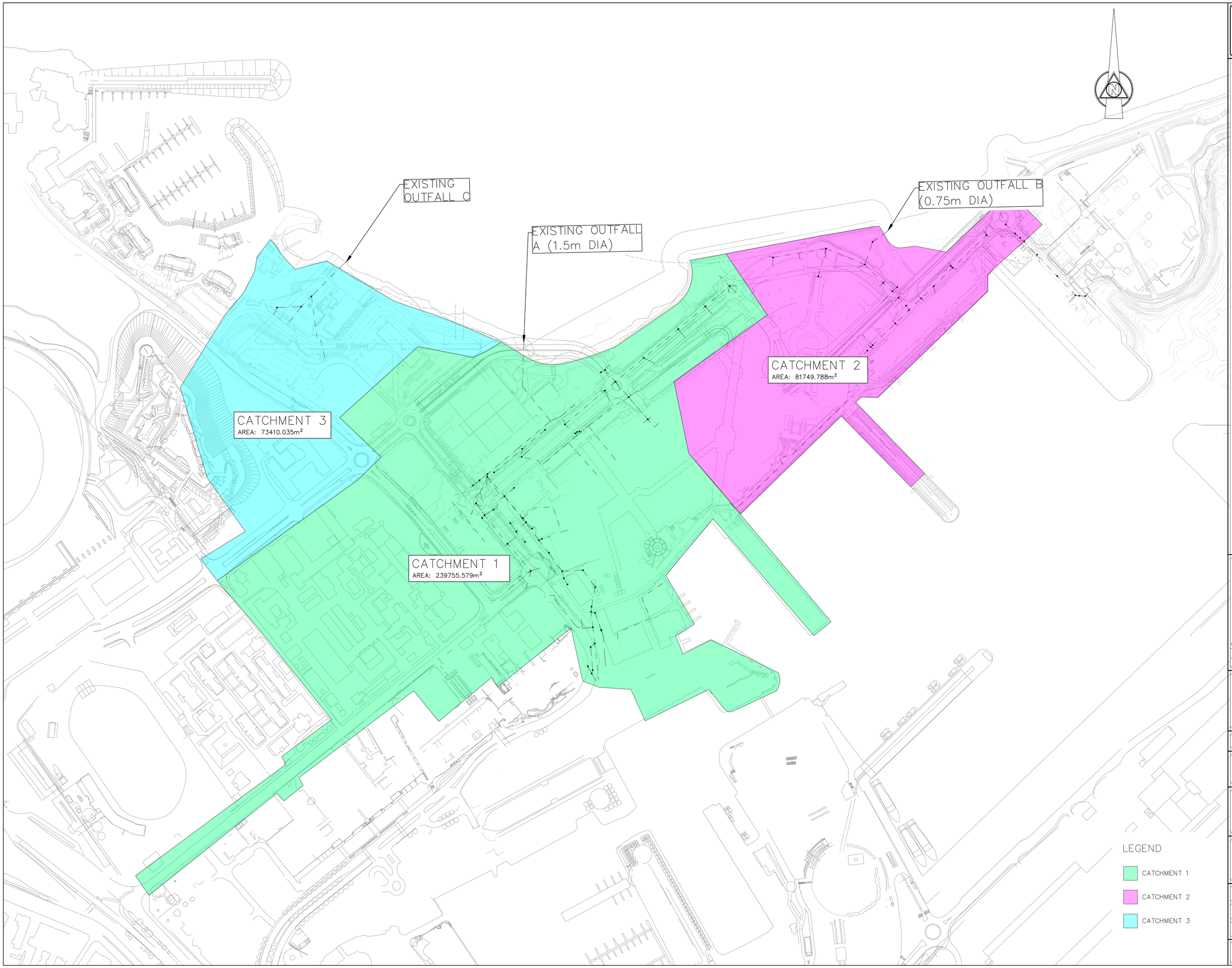

COPYRIGHT OF THIS DRAWING IS HELD BY
NADESON CONSULTING SERVICES (PTY) LTD
AND MUST NOT BE COPIED, RETAINED OR USED WITHOUT CONSENT.

ALL DIMENSIONS & LEVELS TO BE VERIFIED ON SITE BY THE CONTRACTOR AND ANY DISCREPANCIES REPORTED TO THE ENGINEER IMMEDIATELY.

GENERAL NOTES:

MK	DATE	INIT	DESCRIPTION
0A	25/02/26	RN	FOR APPROVAL

REVISION

NADESON
CONSULTING SERVICES
Unit 304, Soho on Strand, 128 Strand Street, Cape Town, 8001 PO Box 51121, V&A Waterfront, 8002
T +27 21 443 2600
E capetown@nadeson.net

Consultant Signature

CLIENT
V&A WATERFRONT

Project
GRANGER BAY EIA

Drawing Title
PRE-CATCHMENT LAYOUT

Design	Design Check
RN	AE
Drawn	**Checked**
RN	AE
Date	**Scale**
FEBRUARY	1:1500

Project No	Drawing No	Revision
C894	C0010	0A

ANNEXURE E: POST CATCHMENTS

COPYRIGHT OF THIS DRAWING IS HELD BY
NADESON CONSULTING SERVICES (PTY) LTD
AND MUST NOT BE COPIED, RETAINED OR USED WITHOUT CONSENT.

ALL DIMENSIONS & LEVELS TO BE VERIFIED ON SITE BY THE CONTRACTOR AND ANY DISCREPANCIES REPORTED TO THE ENGINEER IMMEDIATELY.

GENERAL NOTES:

MK	DATE	INIT	DESCRIPTION
0A	25/02/26	RN	FOR APPROVAL

REVISION

NADESON
CONSULTING SERVICES
Unit 304, Soho on Strand, 128 Strand Street, Cape Town, 8001 PO Box 51121, V&A Waterfront, 8002
T +27 21 443 2600
E capetown@nadeson.net

Consultant Signature

CLIENT
V&A WATERFRONT

Project
GRANGER BAY EIA

Drawing Title
POST-CATCHMENT LAYOUT

Design	Design Check
RN	AE
Drawn	**Checked**
RN	AE
Date	**Scale**
FEBRUARY	1:1500

Project No	Drawing No	Revision
C894	C0011	0A